Solutions, chapter 3

3.1 [SECTION 3.4] The most general two-dimensional homogeneous finite strain distribution is defined by giving the spatial coordinates as linear homogeneous functions,

$$x_1 = X_1 + aX_1 + bX_2, \quad x_2 = X_2 + cX_1 + dX_2.$$

1. Express the components of the right Cauchy-Green deformation tensor $\boldsymbol{C}$ and Lagrangian strain $\boldsymbol{E}$ in terms of the given constants a, b, c, d. Display your answers in two matrices.
2. Calculate ds^2 and $ds^2 - dS^2$ for $d\boldsymbol{X}$ with components (dL, dL).

SOLUTION:

1. The components of the deformation gradient, $F_{iJ} = \partial x_i / \partial X_J$, are

$$[\boldsymbol{F}] = \begin{bmatrix} 1+a & b \\ c & 1+d \end{bmatrix}.$$

The components of $\boldsymbol{C}$ and $\boldsymbol{E}$ follow as

$$\begin{aligned}
[\boldsymbol{C}] &= [\boldsymbol{F}]^T [\boldsymbol{F}] \\
&= \begin{bmatrix} 1+a & c \\ b & 1+d \end{bmatrix} \begin{bmatrix} 1+a & b \\ c & 1+d \end{bmatrix} \\
&= \begin{bmatrix} (1+a)^2 + c^2 & b(1+a) + c(1+d) \\ b(1+a) + c(1+d) & (1+d)^2 + b^2 \end{bmatrix}
\end{aligned}$$

$$\begin{aligned}
[\boldsymbol{E}] &= \frac{1}{2}([\boldsymbol{C}] - [\boldsymbol{I}]) \\
&= \frac{1}{2} \begin{bmatrix} a^2 + 2a + c^2 & b(1+a) + c(1+d) \\ b(1+a) + c(1+d) & d^2 + 2d + b^2 \end{bmatrix}
\end{aligned}$$

2. Calculation of ds^2 and $ds^2 - dS^2$:

$$\begin{aligned}
ds^2 &= C_{IJ} dX_I dX_J \\
&= \begin{bmatrix} C_{11} & C_{12} \\ C_{12} & C_{22} \end{bmatrix} \begin{bmatrix} dL \\ dL \end{bmatrix} \begin{bmatrix} dL \\ dL \end{bmatrix} \\
&= (C_{11} + 2C_{12} + C_{22})(dL)^2 \\
&= [(1+a)^2 + c^2 + 2b(1+a) + 2c(1+d) + (1+d)^2 + b^2](dL)^2 \\
&= [(1+a+b)^2 + (1+c+d)^2](dL)^2
\end{aligned}$$

$$\begin{aligned}
ds^2 - dS^2 &= ds^2 - (\sqrt{2} dL)^2 \\
&= ds^2 - 2(dL)^2 \\
&= [(1+a+b)^2 + (1+c+d)^2 - 2]\,(dL)^2
\end{aligned}$$

3.2 [SECTION 3.4] The deformation of a plate in circular bending is given by

$$x_1 = (X_2 + R)\sin\frac{X_1}{R}, \qquad x_2 = X_2 - (X_2 + R)\left[1 - \cos\frac{X_1}{R}\right], \qquad x_3 = X_3,$$

where L is the length of the plate and R is the radius of curvature.

1. Given a rectangular plate in the reference configuration with length L in the 1-direction and height h in 2-direction, draw the shape of the plate in the deformed configuration for some radius of curvature R.
2. Determine the deformation gradient $\boldsymbol{F}(\boldsymbol{X})$ at any point in the plate.
3. Determine the Jacobian of the deformation $J(\boldsymbol{X})$ at any point in the plate.
4. Use the result for the Jacobian to show that the plate experiences expansion above the centerline and contraction below it.
5. Determine the element of oriented area at the end of the plate in the deformed configuration. What direction is the end pointing and what is the change in its cross-sectional area?
6. Use the result for the oriented area to show that planes in the reference configuration remain plane in the deformed configuration.

SOLUTION:

1. The reference plate (dashed) and deformed plate (solid) are shown in the figure below for $L = 10$, $h = 1$ and $R = 10$.

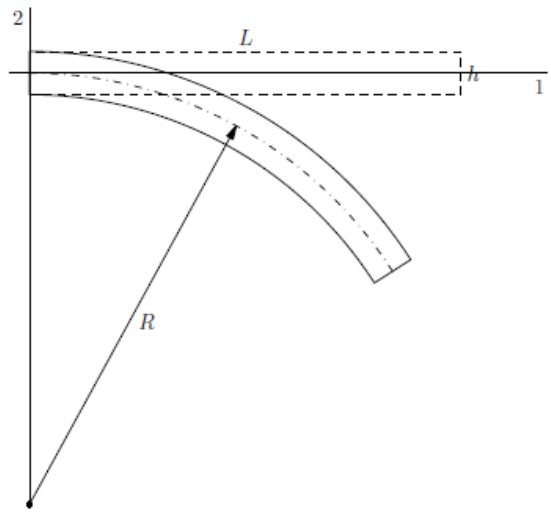

2. The components of the deformation gradient, $F_{iJ} = \partial x_i / \partial X_J$, are

$$[\boldsymbol{F}(\boldsymbol{X})] = \begin{bmatrix} \left(\frac{X_2}{R} + 1\right)\cos\frac{X_1}{R} & \sin\frac{X_1}{R} & 0 \\ -\left(\frac{X_2}{R} + 1\right)\sin\frac{X_1}{R} & \cos\frac{X_1}{R} & 0 \\ 0 & 0 & 1 \end{bmatrix}. \tag{a}$$

3. The Jacobian of the deformation gradient is

$$J(\boldsymbol{X}) = \det \boldsymbol{F}(\boldsymbol{X}) = \left(\frac{X_2}{R} + 1\right)\cos^2\frac{X_1}{R} + \left(\frac{X_2}{R} + 1\right)\sin^2\frac{X_1}{R}$$
$$= \frac{X_2}{R} + 1. \tag{b}$$

4. From Eqn. (b) we see that

$$J \begin{cases} < 1 & \text{for } X_2 < 0, \\ = 1 & \text{for } X_2 = 0, \\ > 1 & \text{for } X_2 > 0. \end{cases}$$

This shows that the plate experiences contraction below the centerline ($X_2 < 0$) and expansion above it ($X_2 > 0$) and that the centerline remains unchanged.

5. In order to compute an element of oriented area, we require the inverse of the deformation gradient:

$$[\boldsymbol{F}^{-1}] = \frac{1}{J}\begin{bmatrix} F_{22} & -F_{12} & 0 \\ -F_{21} & F_{11} & 0 \\ 0 & 0 & 1 \end{bmatrix}. \tag{c}$$

The elements of oriented area along the plate then follow from Nanson's formula (Eqn. (3.9) in CMT):

$$\boldsymbol{n}\, dA = J\boldsymbol{F}^{-T}\boldsymbol{N}\, dA_0.$$

Substituting in Eqn. (c) and setting $\boldsymbol{N} = \boldsymbol{e}_1$, we have

$$\begin{bmatrix} n_1 \\ n_2 \\ n_3 \end{bmatrix} dA = J\frac{1}{J}\begin{bmatrix} F_{22} & -F_{21} & 0 \\ -F_{12} & F_{11} & 0 \\ 0 & 0 & 1 \end{bmatrix}\begin{bmatrix} 1 \\ 0 \\ 0 \end{bmatrix} dA_0 = \begin{bmatrix} F_{22} \\ -F_{12} \\ 0 \end{bmatrix} dA_0 = \begin{bmatrix} \cos(X_1/R) \\ -\sin(X_1/R) \\ 0 \end{bmatrix} dA_0, \tag{d}$$

where in the last step we used Eqn. (a). Comparing the two sides of this equation and recalling that $\|\boldsymbol{n}\| = 1$, we see that

$$\begin{bmatrix} n_1 \\ n_2 \\ n_3 \end{bmatrix} = \begin{bmatrix} \cos(X_1/R) \\ -\sin(X_1/R) \\ 0 \end{bmatrix},$$

and $dA = dA_0$ (i.e. there is no change in the cross-sectional area anywhere along the plate). At the end of the plate ($X_1 = L$), the normal to the cross-section is

$$\boldsymbol{n} = \cos\frac{L}{R}\,\boldsymbol{e}_1 - \sin\frac{L}{R}\,\boldsymbol{e}_2.$$

This points at an angle of $\theta = \tan^{-1}(L/R)$ below the horizon.

6. The element of oriented area $\boldsymbol{n}\, dA$ in Eqn. (d) is independent pf X_2. This means that planes remain plane.

3.3 [SECTION 3.4] In a two-dimensional finite strain experiment, a strain gauge gave stretch ratios α of 0.8 and 0.6 in the X_1 and X_2 directions, respectively, and 0.5 in the direction bisecting the angle between X_1 and X_2.

1. Show in general that the stretch of an element oriented along the unit vector $\boldsymbol{N}$ in the reference configuration is

$$\alpha(\boldsymbol{N}) = \sqrt{\boldsymbol{N} \cdot (\boldsymbol{C}\boldsymbol{N})}.$$

2. Determine the components of $\boldsymbol{C}$ and $\boldsymbol{E}$ at the position of the strain gauge.
3. Determine the new angle between elements initially parallel to the axes.
4. Determine the Jacobian of the deformation.

SOLUTION:

1. Consider an infinitesimal material vector oriented along $\boldsymbol{N}$, i.e.

$$d\boldsymbol{X} = \boldsymbol{N} dS. \tag{a}$$

As shown in Section 3.4.6 in CMT, the length squared of the corresponding spatial vector after deformation is

$$ds^2 = C_{IJ} dX_I dX_J = (C_{IJ} N_I N_J) dS^2 = (\boldsymbol{N} \cdot (\boldsymbol{C}\boldsymbol{N})) dS^2,$$

where $\boldsymbol{C}$ is the right Cauchy-Green deformation tensor and where we have used Eqn. (a). The stretch of an element oriented along $\boldsymbol{N}$ in the reference configuration is then

$$\alpha(\boldsymbol{N}) = \frac{ds}{dS} = \frac{\sqrt{\boldsymbol{N} \cdot (\boldsymbol{C}\boldsymbol{N})}\, dS}{dS} = \sqrt{\boldsymbol{N} \cdot (\boldsymbol{C}\boldsymbol{N})}, \tag{b}$$

which is the required result.

2. We are given that $\alpha(\boldsymbol{e}_1) = 0.8$ and $\alpha(\boldsymbol{e}_2) = 0.6$. Using Eqn. (b), we have

$$\begin{aligned} \alpha^2(\boldsymbol{e}_1) &= 0.64 = \boldsymbol{e}_1 \cdot (\boldsymbol{C}\boldsymbol{e}_1) = C_{11}, \\ \alpha^2(\boldsymbol{e}_2) &= 0.36 = \boldsymbol{e}_2 \cdot (\boldsymbol{C}\boldsymbol{e}_2) = C_{22}. \end{aligned} \tag{c}$$

We are also given that $\alpha(\boldsymbol{N}) = 0.5$ for $\boldsymbol{N} = (\boldsymbol{e}_1 + \boldsymbol{e}_2)/\sqrt{2}$. Using Eqn. (b), we have

$$\begin{aligned} \alpha^2(\boldsymbol{N}) = 0.25 &= \frac{1}{\sqrt{2}} \begin{bmatrix} 1 & 1 \end{bmatrix} \begin{bmatrix} C_{11} & C_{12} \\ C_{12} & C_{22} \end{bmatrix} \frac{1}{\sqrt{2}} \begin{bmatrix} 1 \\ 1 \end{bmatrix} \\ &= \frac{1}{2} \begin{bmatrix} 1 & 1 \end{bmatrix} \begin{bmatrix} C_{11} + C_{12} \\ C_{12} + C_{22} \end{bmatrix} \\ &= \frac{1}{2} \left(C_{11} + 2C_{12} + C_{22} \right). \end{aligned}$$

Substituting in C_{11} and C_{22} from Eqn. (c) gives

$$0.25 = \frac{1}{2}(0.64 + 2C_{12} + 0.36) \qquad \Rightarrow \qquad C_{12} = -0.25. \tag{d}$$

Combining Eqns. (c) and (d), we have

$$[\boldsymbol{C}] = \begin{bmatrix} 0.64 & -0.25 \\ -0.25 & 0.36 \end{bmatrix}.$$

The Lagrangian strain tensor $\boldsymbol{E} = (\boldsymbol{C} - \boldsymbol{I})/2$ follows as

$$[\boldsymbol{E}] = \frac{1}{2}\begin{bmatrix} 0.64-1 & -0.25 \\ -0.25 & 0.36-1 \end{bmatrix} = \begin{bmatrix} -0.18 & -0.125 \\ -0.125 & -0.32 \end{bmatrix}.$$

3. The angle in the deformed configuration between elements parallel to the axes in the reference configuration is given by (see Section 3.4.6 in CMT):

$$\cos\theta_{12} = \frac{C_{12}}{\sqrt{C_{11}C_{22}}} = \frac{-0.25}{\sqrt{0.64 \cdot 0.36}} = -0.521 \qquad \Rightarrow \qquad \theta_{12} = 121.4^\circ.$$

4. The Jacobian of the deformation is $J = \det \boldsymbol{F}$. Using Eqn. (3.7) we also have

$$J = \sqrt{\det \boldsymbol{C}} = \left[\begin{vmatrix} 0.64 & -0.25 \\ -0.25 & 0.36 \end{vmatrix}\right]^{1/2} = \left[0.64 \cdot 0.36 - (-0.25)^2\right]^{1/2} = 0.410.$$

3.7 [SECTION 3.4] Consider the deformation defined by

$$x_1 = X_3 - X_1 - 2X_2, \quad x_2 = \sqrt{2}(X_1 - 2X_2), \quad x_3 = X_3 + X_1 + 2X_2.$$

1. Calculate the deformation gradient, $\boldsymbol{F}$.
2. Determine the polar decomposition of $\boldsymbol{F} = \boldsymbol{R}\boldsymbol{U}$.
3. Consider a line element $d\boldsymbol{X}$ lying along the X_1 axis with length dS. Under this deformation the line element is stretched and rotated into the line element $d\boldsymbol{x}$.
   a. Calculate the length, $ds = \|d\boldsymbol{x}\|$.
   b. Calculate the vector, $d\boldsymbol{y} = \boldsymbol{U}d\boldsymbol{X}$, and show $\|d\boldsymbol{y}\| = ds$. This shows that all the stretching is represented by $\boldsymbol{U}$.
   c. Explain why $d\boldsymbol{y}$ is parallel to $d\boldsymbol{X}$. Is this true in general?
   d. Calculate the vector $d\boldsymbol{z} = \boldsymbol{R}d\boldsymbol{X}$ and show that $\|d\boldsymbol{z}\| = dS$, i.e. $\boldsymbol{R}$ is a pure rotation with no change in length.

SOLUTION:

1. The components of the deformation gradient, $F_{iJ} = \partial x_i / \partial X_J$, are

$$[\boldsymbol{F}] = \begin{bmatrix} -1 & -2 & 1 \\ \sqrt{2} & -2\sqrt{2} & 0 \\ 1 & 2 & 1 \end{bmatrix}.$$

2. To obtain the polar decomposition of $\boldsymbol{F}$, we first obtain the right stretch tensor $\boldsymbol{U}$ by taking the square root of the right Cauchy-Green deformation tensor $\boldsymbol{C}$ and then compute the rotation $\boldsymbol{R}$. The components of $\boldsymbol{C}$ are

$$[\boldsymbol{C}] = [\boldsymbol{F}]^T [\boldsymbol{F}] = \begin{bmatrix} -1 & \sqrt{2} & 1 \\ -2 & -2\sqrt{2} & 2 \\ 1 & 0 & 1 \end{bmatrix} \begin{bmatrix} -1 & -2 & 1 \\ \sqrt{2} & -2\sqrt{2} & 0 \\ 1 & 2 & 1 \end{bmatrix} = \begin{bmatrix} 4 & 0 & 0 \\ 0 & 16 & 0 \\ 0 & 0 & 2 \end{bmatrix}.$$

$\boldsymbol{C}$ is diagonal, so we can immediately take the square root (without having to explicitly obtain its spectral decomposition). Therefore,

$$[\boldsymbol{U}] = \sqrt{[\boldsymbol{C}]} = \begin{bmatrix} 2 & 0 & 0 \\ 0 & 4 & 0 \\ 0 & 0 & \sqrt{2} \end{bmatrix}. \tag{a}$$

The components of the rotation tensor then follow from

$$[\boldsymbol{R}] = [\boldsymbol{F}]\,[\boldsymbol{U}]^{-1} = \begin{bmatrix} -1 & -2 & 1 \\ \sqrt{2} & -2\sqrt{2} & 0 \\ 1 & 2 & 1 \end{bmatrix} \begin{bmatrix} 1/2 & 0 & 0 \\ 0 & 1/4 & 0 \\ 0 & 0 & 1/\sqrt{2} \end{bmatrix} = \frac{1}{2} \begin{bmatrix} -1 & -1 & \sqrt{2} \\ \sqrt{2} & -\sqrt{2} & 0 \\ 1 & 1 & \sqrt{2} \end{bmatrix}. \tag{b}$$

Equations (a) and (b) together define the polar decomposition of $\boldsymbol{F}$.

3. The infinitesimal material vector is $d\boldsymbol{X} = \boldsymbol{e}_1 dS$.

a. The length squared in the deformed configuration is (see Section 3.4.6 in CMT)

$$ds^2 = C_{IJ} dX_I dX_J = \begin{bmatrix} dS & 0 & 0 \end{bmatrix} \begin{bmatrix} 4 & 0 & 0 \\ 0 & 16 & 0 \\ 0 & 0 & 2 \end{bmatrix} \begin{bmatrix} dS \\ 0 \\ 0 \end{bmatrix} = \begin{bmatrix} dS & 0 & 0 \end{bmatrix} \begin{bmatrix} 4dS \\ 0 \\ 0 \end{bmatrix} = 4(dS)^2.$$

Thus

$$ds = 2dS. \tag{c}$$

b. The components of $d\boldsymbol{y}$ are given by

$$[d\boldsymbol{y}] = [\boldsymbol{U}]\,[d\boldsymbol{X}] = \begin{bmatrix} 2 & 0 & 0 \\ 0 & 4 & 0 \\ 0 & 0 & \sqrt{2} \end{bmatrix} \begin{bmatrix} dS \\ 0 \\ 0 \end{bmatrix} = \begin{bmatrix} 2dS \\ 0 \\ 0 \end{bmatrix}.$$

where we have used Eqn. (a). The norm of $d\boldsymbol{y}$ is

$$\|d\boldsymbol{y}\| = 2dS = ds,$$

where the last equality follows from Eqn. (c).

c. $d\boldsymbol{y}$ is parallel to $d\boldsymbol{X}$ because the deformation is represented in the principal coordinate system. This is not true in general.

d. The components of $d\boldsymbol{z}$ are given by

$$[d\boldsymbol{z}] = [\boldsymbol{R}]\,[d\boldsymbol{X}] = \frac{1}{2} \begin{bmatrix} -1 & -1 & \sqrt{2} \\ \sqrt{2} & -\sqrt{2} & 0 \\ 1 & 1 & \sqrt{2} \end{bmatrix} \begin{bmatrix} dS \\ 0 \\ 0 \end{bmatrix} = \frac{dS}{2} \begin{bmatrix} -1 \\ \sqrt{2} \\ 1 \end{bmatrix}.$$

where we have used Eqn. (b). The norm of $d\boldsymbol{z}$ is

$$\|d\boldsymbol{z}\| = \frac{dS}{2}\sqrt{(-1)^2 + (\sqrt{2})^2 + 1^2} = \frac{dS}{2}\sqrt{4} = dS,$$

which shows that there is no change in length as expected.

3.9 [SECTION 3.4] The deformation gradient of a homogeneous deformation is given by

$$[\boldsymbol{F}] = \begin{bmatrix} \sqrt{3} & 1 & 0 \\ 0 & 2 & 0 \\ 0 & 0 & 1 \end{bmatrix}.$$

1. Write out the deformation mapping corresponding to this deformation gradient.
2. Compute the components of the right Cauchy-Green deformation tensor $\boldsymbol{C}$. Display your results in matrix form.
3. Compute the principal values (eigenvalues) and principal directions (eigenvectors) of $\boldsymbol{C}$.
4. Determine the polar decomposition, $\boldsymbol{F} = \boldsymbol{R}\boldsymbol{U}$. Write out in matrix form the components of $\boldsymbol{R}$ and $\boldsymbol{U}$ relative to the Cartesian coordinate system.
5. To interpret $\boldsymbol{F} = \boldsymbol{R}\boldsymbol{U}$, we write $\boldsymbol{x} = \boldsymbol{F}\boldsymbol{X} = \boldsymbol{R}\boldsymbol{y}$, where $\boldsymbol{y} = \boldsymbol{U}\boldsymbol{X}$. Now consider a unit circle in the reference configuration. To what does $\boldsymbol{U}$ map this circle in the intermediate configuration $\boldsymbol{y}$? Plot your result pointing out important directions. Next, $\boldsymbol{R}\boldsymbol{y}$ rotates the intermediate configuration to the deformed configuration $\boldsymbol{x}$. By what angle is the intermediate configuration rotated? Plot the change from the intermediate to the deformed configuration pointing out the angle of rotation.
6. Apply the congruence relation to obtain the left stretch tensor $\boldsymbol{V}$. Verify that $\boldsymbol{F} = \boldsymbol{R}\boldsymbol{U} = \boldsymbol{V}\boldsymbol{R}$.

SOLUTION:

1. The deformation is homogeneous, therefore the deformation mapping is simply $\boldsymbol{x} = \boldsymbol{F}\boldsymbol{X}$, which gives

$$x_1 = \sqrt{3}X_1 + X_2, \qquad x_2 = 2X_2, \qquad x_3 = X_3.$$

2. The components of the right Cauchy=Green deformation tensor are

$$[\boldsymbol{C}] = [\boldsymbol{F}]^T [\boldsymbol{F}] = \begin{bmatrix} \sqrt{3} & 0 & 0 \\ 1 & 2 & 0 \\ 0 & 0 & 1 \end{bmatrix} \begin{bmatrix} \sqrt{3} & 1 & 0 \\ 0 & 2 & 0 \\ 0 & 0 & 1 \end{bmatrix} = \begin{bmatrix} 3 & \sqrt{3} & 0 \\ \sqrt{3} & 5 & 0 \\ 0 & 0 & 1 \end{bmatrix}.$$

3. The eigenvalues of $\boldsymbol{C}$ follow from the condition that the determinant of the eigenequation is zero:

$$\begin{aligned} \det(\boldsymbol{C} - \lambda^{\boldsymbol{C}}\boldsymbol{I}) &= \begin{vmatrix} 3-\lambda^{\boldsymbol{C}} & \sqrt{3} & 0 \\ \sqrt{3} & 5-\lambda^{\boldsymbol{C}} & 0 \\ 0 & 0 & 1-\lambda^{\boldsymbol{C}} \end{vmatrix} \\ &= (3-\lambda^{\boldsymbol{C}})(5-\lambda^{\boldsymbol{C}})(1-\lambda^{\boldsymbol{C}}) - 3(1-\lambda^{\boldsymbol{C}}) \\ &= (6-\lambda^{\boldsymbol{C}})(2-\lambda^{\boldsymbol{C}})(1-\lambda^{\boldsymbol{C}}) \\ &= 0. \end{aligned}$$

The solutions are

$$\lambda_1^{\boldsymbol{C}} = 6, \qquad \lambda_2^{\boldsymbol{C}} = 2, \qquad \lambda_3^{\boldsymbol{C}} = 1. \tag{a}$$

The eigenvectors of $\boldsymbol{C}$ are obtained by substituting the eigenvalue solutions into the eigenequation. For $\lambda_1^{\boldsymbol{C}} = 6$, we have

$$\begin{bmatrix} 3-6 & \sqrt{3} & 0 \\ \sqrt{3} & 5-6 & 0 \\ 0 & 0 & 1-6 \end{bmatrix} \begin{bmatrix} \Lambda_{11}^{\boldsymbol{C}} \\ \Lambda_{12}^{\boldsymbol{C}} \\ \Lambda_{13}^{\boldsymbol{C}} \end{bmatrix} = \begin{bmatrix} 0 \\ 0 \\ 0 \end{bmatrix}.$$

These equations are linearly dependent (since the determinant is zero). Thus there are two independent equations for the components of $\boldsymbol{\Lambda}_1$. Choose:

$$\begin{aligned} \sqrt{3}\Lambda_{11}^{\boldsymbol{C}} - \Lambda_{12}^{\boldsymbol{C}} &= 0, \\ -5\Lambda_{13}^{\boldsymbol{C}} &= 0. \end{aligned}$$

This gives $\Lambda_{12}^{\boldsymbol{C}} = \sqrt{3}\Lambda_{11}^{\boldsymbol{C}}$ and $\Lambda_{13}^{\boldsymbol{C}} = 0$. Applying the normalization condition, $\left\|\boldsymbol{\Lambda}_1^{\boldsymbol{C}}\right\| = 1$, we have $\boldsymbol{\Lambda}_1^{\boldsymbol{C}} = [1/2, \sqrt{3}/2, 0]^T$. The eigenvectors associated with the remaining eigenvalues can be obtained in a similar fashion. The final result is

$$\boldsymbol{\Lambda}_1^{\boldsymbol{C}} = \begin{bmatrix} 1/2 \\ \sqrt{3}/2 \\ 0 \end{bmatrix}, \qquad \boldsymbol{\Lambda}_2^{\boldsymbol{C}} = \begin{bmatrix} -\sqrt{3}/2 \\ 1/2 \\ 0 \end{bmatrix}, \qquad \boldsymbol{\Lambda}_3^{\boldsymbol{C}} = \begin{bmatrix} 0 \\ 0 \\ 1 \end{bmatrix}. \tag{b}$$

The right stretch tensor then follows through its spectral decomposition in Eqn. (3.20) in CMT:

$$\boldsymbol{U} = \sum_{\alpha=1}^{3} \sqrt{\lambda_\alpha^{\boldsymbol{C}}}\, \boldsymbol{\Lambda}_\alpha^{\boldsymbol{C}} \otimes \boldsymbol{\Lambda}_\alpha^{\boldsymbol{C}}.$$

Substituting in Eqns. (a) and (b), we have

$$\begin{aligned} [\boldsymbol{U}] &= \frac{1}{4}\sqrt{6} \begin{bmatrix} 1 \\ \sqrt{3} \\ 0 \end{bmatrix} \otimes \begin{bmatrix} 1 \\ \sqrt{3} \\ 0 \end{bmatrix} + \frac{1}{4}\sqrt{2} \begin{bmatrix} -\sqrt{3} \\ 1 \\ 0 \end{bmatrix} \otimes \begin{bmatrix} -\sqrt{3} \\ 1 \\ 0 \end{bmatrix} + \begin{bmatrix} 0 \\ 0 \\ 1 \end{bmatrix} \otimes \begin{bmatrix} 0 \\ 0 \\ 1 \end{bmatrix} \\ &= \frac{1}{4}\sqrt{6} \begin{bmatrix} 1 & \sqrt{3} & 0 \\ \sqrt{3} & 3 & 0 \\ 0 & 0 & 0 \end{bmatrix} + \frac{1}{4}\sqrt{2} \begin{bmatrix} 3 & -\sqrt{3} & 0 \\ -\sqrt{3} & 1 & 0 \\ 0 & 0 & 0 \end{bmatrix} + \begin{bmatrix} 0 & 0 & 0 \\ 0 & 0 & 0 \\ 0 & 0 & 1 \end{bmatrix} \\ &= \frac{1}{2\sqrt{2}} \begin{bmatrix} 3+\sqrt{3} & 3-\sqrt{3} & 0 \\ 3-\sqrt{3} & 1+3\sqrt{3} & 0 \\ 0 & 0 & 2\sqrt{2} \end{bmatrix}. \end{aligned} \tag{c}$$

The components of the rotation tensor $\boldsymbol{R}$ are obtained from

$$[\boldsymbol{R}] = [\boldsymbol{F}]\,[\boldsymbol{U}]^{-1} = \begin{bmatrix} \sqrt{3} & 1 & 0 \\ 0 & 2 & 0 \\ 0 & 0 & 1 \end{bmatrix} \frac{1}{4\sqrt{6}} \begin{bmatrix} 1+3\sqrt{3} & -(3-\sqrt{3}) & 0 \\ -(3-\sqrt{3}) & 3+\sqrt{3} & 0 \\ 0 & 0 & 4\sqrt{6} \end{bmatrix}$$

$$= \frac{1}{2\sqrt{2}} \begin{bmatrix} \sqrt{3}+1 & \sqrt{3}-1 & 0 \\ 1-\sqrt{3} & \sqrt{3}+1 & 0 \\ 0 & 0 & 2\sqrt{2} \end{bmatrix}. \qquad \text{(d)}$$

This completes the derivation of the right polar decomposition, $\boldsymbol{F} = \boldsymbol{R}\boldsymbol{U}$. The components of $\boldsymbol{U}$ and $\boldsymbol{R}$ are given in Eqns. (c) and (d).

4. The right stretch tensor $\boldsymbol{U}$ maps the unit circle, $X_1^2 + X_2^2 = 1$ into an ellipse whose major axis is inclined at 60° to the 1-axis (see frame (a) of figure below). The axes of this ellipse coincide with the principal directions (eigenvectors) of $\boldsymbol{U}$ (and $\boldsymbol{C}$) as explained in Section 2.5.5 of CMT. The rotation tensor $\boldsymbol{R}$ then rotates the ellipse by 15° clockwise to an angle of 45° relative to the 1-axis (see frame (b) below).

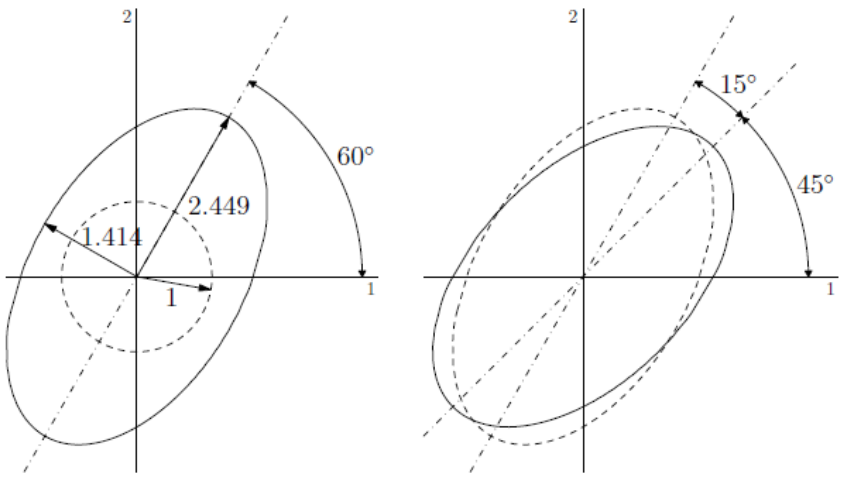

(a) (b)

5. The components of the left stretch tensor $\boldsymbol{V}$ are obtained using the congruence relation in Eqn. (3.18) in CMT. Using the right polar decomposition, $\boldsymbol{F} = \boldsymbol{R}\boldsymbol{U}$, we have

$$[\boldsymbol{V}] = [\boldsymbol{R}]\,[\boldsymbol{U}]\,[\boldsymbol{R}]^T = [\boldsymbol{F}]\,[\boldsymbol{R}]^T$$

$$= \frac{1}{2\sqrt{2}} \begin{bmatrix} \sqrt{3} & 1 & 0 \\ 0 & 2 & 0 \\ 0 & 0 & 1 \end{bmatrix} \begin{bmatrix} \sqrt{3}+1 & 1-\sqrt{3} & 0 \\ \sqrt{3}-1 & \sqrt{3}+1 & 0 \\ 0 & 0 & 2\sqrt{2} \end{bmatrix}$$

$$= \frac{1}{\sqrt{2}} \begin{bmatrix} \sqrt{3}+1 & \sqrt{3}-1 & 0 \\ \sqrt{3}-1 & \sqrt{3}+1 & 0 \\ 0 & 0 & \sqrt{2} \end{bmatrix}. \qquad \text{(e)}$$

We verify that both the right and left polar decompositions are satisfied by $\boldsymbol{U}$,

$\boldsymbol{R}$ and $\boldsymbol{V}$ in Eqns. (c), (d) and Eqns. (e), respectively:

$$
\begin{aligned}
[\boldsymbol{R}]\,[\boldsymbol{U}] &= \frac{1}{8}\begin{bmatrix} \sqrt{3}+1 & \sqrt{3}-1 & 0 \\ 1-\sqrt{3} & \sqrt{3}+1 & 0 \\ 0 & 0 & 2\sqrt{2} \end{bmatrix}\begin{bmatrix} 3+\sqrt{3} & 3-\sqrt{3} & 0 \\ 3-\sqrt{3} & 1+3\sqrt{3} & 0 \\ 0 & 0 & 2\sqrt{2} \end{bmatrix} \\
&= \begin{bmatrix} \sqrt{3} & 1 & 0 \\ 0 & 2 & 0 \\ 0 & 0 & 1 \end{bmatrix}, \\
[\boldsymbol{V}]\,[\boldsymbol{R}] &= \frac{1}{4}\begin{bmatrix} \sqrt{3}+1 & \sqrt{3}-1 & 0 \\ \sqrt{3}-1 & \sqrt{3}+1 & 0 \\ 0 & 0 & \sqrt{2} \end{bmatrix} . \begin{bmatrix} \sqrt{3}+1 & \sqrt{3}-1 & 0 \\ 1-\sqrt{3} & \sqrt{3}+1 & 0 \\ 0 & 0 & 2\sqrt{2} \end{bmatrix} \\
&= \begin{bmatrix} \sqrt{3} & 1 & 0 \\ 0 & 2 & 0 \\ 0 & 0 & 1 \end{bmatrix}.
\end{aligned}
$$

3.10 [SECTION 3.5] Compute the small strain tensors $\boldsymbol{\epsilon}$ corresponding to the Lagrangian strains for uniform stretch and simple shear in Example 3.6 in CMT.

SOLUTION:

The components of the small strain tensor are defined in Eqn. (3.28) in CMT as

$$\epsilon_{ij} = \frac{1}{2}(u_{i,j} + u_{j,i}), \tag{a}$$

where $\boldsymbol{u}$ is the displacement vector. The deformations mappings for uniform stretch and simple shear discussed in Example 3.6 in CMT are given in Example 3.1 in CMT. For uniform stretching, the deformation mapping is

$$
\begin{aligned}
x_1 &= \alpha_1 X_1 &&= X_1 + (\alpha_1 - 1)X_1 &&\equiv X_1 + u_1, \\
x_2 &= \alpha_2 X_2 &&= X_2 + (\alpha_2 - 1)X_2 &&\equiv X_2 + u_2, \\
x_3 &= \alpha_3 X_3 &&= X_3 + (\alpha_3 - 1)X_3 &&\equiv X_3 + u_3.
\end{aligned}
$$

We see that $u_i = (\alpha_i - 1)X_i$ (no sum on i). Using these displacements in Eqn. (a), the components of the strain tensor for uniform stretching are

$$[\boldsymbol{\epsilon}] = \begin{bmatrix} \alpha_1 - 1 & 0 & 0 \\ 0 & \alpha_2 - 1 & 0 \\ 0 & 0 & \alpha_3 - 1 \end{bmatrix}.$$

For simple shear, the deformation mapping is

$$[\boldsymbol{\epsilon}] = \frac{1}{2}\begin{bmatrix} 0 & \gamma & 0 \\ \gamma & 0 & 0 \\ 0 & 0 & 0 \end{bmatrix}.$$

3.15 [SECTION 3.6] Consider the pure stretch deformation given in Exercise 3.8. Assume that $p = p(t)$ and $q = q(t)$ are functions of time, so that

$$x_1 = (1 + p(t))X_1 + q(t)X_2, \qquad x_2 = q(t)X_1 + (1 + p(t))X_2, \qquad x_3 = X_3,$$

1. Compute the time-dependent deformation gradient $\boldsymbol{F}(t)$.
2. Compute the components of the rate of change of the deformation gradient $\dot{\boldsymbol{F}}$.
3. Compute the inverse deformation mapping, $\boldsymbol{X} = \boldsymbol{\varphi}^{-1}(\boldsymbol{x}, t)$.
4. Verify that $\dot{F}_{iJ} = l_{ij}F_{jJ}$. **Hint:** You will need to compute $\boldsymbol{l}$ for this deformation and show that the result obtained from $l_{ij}F_{jJ}$ is equal to the result obtained above.

SOLUTION:

1. The deformation gradient:

$$[\boldsymbol{F}(t)] = \begin{bmatrix} 1 + p(t) & q(t) & 0 \\ q(t) & 1 + p(t) & 0 \\ 0 & 0 & 1 \end{bmatrix}.$$

2. The rate of change of the deformation gradient:

$$\left[\dot{\boldsymbol{F}}\right] = \begin{bmatrix} \dot{p} & \dot{q} & 0 \\ \dot{q} & \dot{p} & 0 \\ 0 & 0 & 0 \end{bmatrix}$$

3. The inverse mapping is obtained by solving for X_1, X_2 and X_3 in terms of x_1, x_2 and x_3. The result is

$$X_1 = \frac{-(1+p)x_1 + qx_2}{q^2 - (1+p)^2}, \qquad X_2 = \frac{qx_1 - (1+p)x_2}{q^2 - (1+p)^2}, \qquad X_3 = x_3. \tag{a}$$

4. Verify that $\dot{\boldsymbol{F}} = \boldsymbol{l}\boldsymbol{F}$:
The referential velocity vector, $V_i = \partial x_i / \partial t$, is

$$[\boldsymbol{V}] = \begin{bmatrix} \dot{p}X_1 + \dot{q}X_2 \\ \dot{q}X_1 + \dot{p}X_2 \\ 0 \end{bmatrix}. \tag{b}$$

Substituting Eqn. (a) into Eqn. (b) and collecting terms gives the components of the spatial velocity tensor, $v_i = V_i(\boldsymbol{X}(\boldsymbol{x}))$:

$$[\boldsymbol{v}] = \frac{1}{q^2 - (1+p)^2} \begin{bmatrix} (-\dot{p}(1+p) + \dot{q}q)x_1 + (\dot{p}q - \dot{q}(1+p))x_2 \\ (\dot{p}q - \dot{q}(1+p))x_1 + (-\dot{p}(1+p) + \dot{q}q)x_2 \\ 0 \end{bmatrix}.$$

The velocity gradient, $l_{ij} = \partial v_i / \partial x_j$, follows as

$$[\boldsymbol{l}] = \frac{1}{q^2 - (1+p)^2} \begin{bmatrix} -\dot{p}(1+p) + \dot{q}q & \dot{p}q - \dot{q}(1+p) & 0 \\ \dot{p}q - \dot{q}(1+p) & -\dot{p}(1+p) + \dot{q}q & 0 \\ 0 & 0 & 0 \end{bmatrix}.$$

Compute $\boldsymbol{l}\boldsymbol{F}$:

$$[\boldsymbol{l}]\,[\boldsymbol{F}] = \frac{1}{q^2-(1+p)^2}\begin{bmatrix} -\dot{p}(1+p)+\dot{q}q & \dot{p}q-\dot{q}(1+p) & 0 \\ \dot{p}q-\dot{q}(1+p) & -\dot{p}(1+p)+\dot{q}q & 0 \\ 0 & 0 & 0 \end{bmatrix}\begin{bmatrix} 1+p & q & 0 \\ q & 1+p & 0 \\ 0 & 0 & 1 \end{bmatrix}$$

$$= \begin{bmatrix} \dot{p} & \dot{q} & 0 \\ \dot{q} & \dot{p} & 0 \\ 0 & 0 & 0 \end{bmatrix}.$$

This is the same as the result in Part 2. We have shown that $\boldsymbol{l}\boldsymbol{F}$ is equal to $\dot{\boldsymbol{F}}$.

3.18 [SECTION 3.6] Given the velocity field

$$v_1 = \exp(x_3 - ct)\cos\omega t, \quad v_2 = \exp(x_3 - ct)\sin\omega t, \quad v_3 = c = \text{const.}$$

1. Show that the speed (magnitude of the velocity) of every particle is constant.
2. Calculate the acceleration components a_i. (Note that the previous part implies that $a_i v_i = 0$.)
3. Find the logarithmic rate of stretching, $\dot{\alpha}/\alpha$, for a line element that is in the direction of $(1/\sqrt{2}, 0, 1/\sqrt{2})$ in the deformed configuration at $\boldsymbol{x} = 0$.
4. Integrate the velocity equations to find the motion $\boldsymbol{x} = \boldsymbol{\varphi}(\boldsymbol{X}, t)$ using the initial conditions that at $t = 0$, $\boldsymbol{x} = \boldsymbol{X}$. **Hint:** integrate the v_3 equation first.

SOLUTION:

1. Start with

$$v_1 = e^{x_3 - ct}\cos\omega t, \quad v_2 = e^{x_3 - ct}\sin\omega t, \quad v_3 = c = \text{const.} \tag{a}$$

The magnitude of the velocity follows as

$$\begin{aligned} \|\boldsymbol{v}\|^2 &= e^{2(x_3-ct)}\cos^2\omega t + e^{2(x_3-ct)}\sin^2\omega t + c^2 \\ &= e^{2(x_3-ct)} + c^2. \end{aligned} \tag{b}$$

Now from $v_3 = \partial x_3/\partial t = c$, we have

$$x_3 = ct + h(\boldsymbol{X}) + d, \tag{c}$$

where $h(\boldsymbol{X})$ is an arbitrary function of $\boldsymbol{X}$ and d is a constant. Substituting Eqn. (c) into Eqn. (b), we have

$$\|\boldsymbol{v}\|^2 = e^{2(h(\boldsymbol{X})+d)} + c^2.$$

For a given particle $\boldsymbol{X}$, the magnitude of the velocity is constant with respect to time.

2. Next, substituting Eqn. (c) into Eqn. (a) gives

$$v_1 = e^{h(\boldsymbol{X})+d}\cos\omega t, \quad v_2 = e^{h(\boldsymbol{X})+d}\sin\omega t, \quad v_3 = c. \tag{d}$$

To obtain the acceleration, we take differentiate $\boldsymbol{v}$ in Eqn. (d) with respect to time:

$$a_1 = \frac{\partial v_1}{\partial t} = -\omega e^{h(\boldsymbol{X})+d}\sin\omega t \quad = -\omega e^{x_3-ct}\sin\omega t, \tag{e1}$$

$$a_2 = \frac{\partial v_2}{\partial t} = \omega e^{h(\boldsymbol{X})+d}\cos\omega t \quad = \omega e^{x_3-ct}\cos\omega t, \tag{e2}$$

$$a_3 = 0, \tag{e3}$$

where the final results in Eqns. (e1) and (e2) were obtained by substituting in Eqn. (c).

Alternatively, we can work directly with Eqn. (a) and use the material time derivative:

$$\begin{aligned} a_1 = \frac{Dv_1}{Dt} &= \left.\frac{\partial v_1}{\partial t}\right|_{\boldsymbol{x}} + v_j\frac{\partial v_1}{\partial x_j} \\ &= \frac{\partial}{\partial t}\left[e^{x_3-ct}\cos\omega t\right] + c\frac{\partial}{\partial x_3}\left[e^{x_3-ct}\cos\omega t\right] \\ &= -ce^{x_3-ct}\cos\omega t - \omega e^{x_3-ct}\sin\omega t + ce^{x_3-ct}\cos\omega t \\ &= -\omega e^{x_3-ct}\sin\omega t, \end{aligned}$$

which is the same result obtained in Eqn. (e1). Similarly,

$$\begin{aligned} a_2 = \frac{Dv_2}{Dt} &= -ce^{x_3-ct}\sin\omega t + \omega e^{x_3-ct}\cos\omega t + ce^{x_3-ct}\sin\omega t \\ &= \omega e^{x_3-ct}\cos\omega t, \end{aligned}$$

which is the same result obtained in Eqn. (e2).

3. From Eqns. (3.42) and (3.43) in CMT we have that

$$\dot{\alpha}/\alpha = \dot{\overline{\ln\alpha}} = d_{ij}m_i m_j = \boldsymbol{m}\cdot(\boldsymbol{d}\boldsymbol{m}). \tag{f}$$

Here d_{ij} are the components of the rate of deformation tensor defined in Eqn. (3.38) in CMT:

$$\boldsymbol{d} = \frac{1}{2}(\nabla\boldsymbol{v} + (\nabla\boldsymbol{v})^T).$$

Using Eqn. (a), the velocity gradient is

$$[\nabla\boldsymbol{v}] = \begin{bmatrix} 0 & 0 & e^{x_3-ct}\cos\omega t \\ 0 & 0 & e^{x_3-ct}\sin\omega t \\ 0 & 0 & 0 \end{bmatrix},$$

and the rate of deformation tensor follows as

$$[\boldsymbol{d}] = \frac{1}{2}e^{x_3-ct}\begin{bmatrix} 0 & 0 & \cos\omega t \\ 0 & 0 & \sin\omega t \\ \cos\omega t & \sin\omega t & 0 \end{bmatrix}.$$

For the direction $(1/\sqrt{2}, 0, 1/\sqrt{2})$, we have $\boldsymbol{m} = [1\ 0\ 1]^T/\sqrt{2}$ and so

$$[\boldsymbol{dm}] = \frac{1}{2\sqrt{2}}e^{x_3-ct}\begin{bmatrix} 0 & 0 & \cos\omega t \\ 0 & 0 & \sin\omega t \\ \cos\omega t & \sin\omega t & 0 \end{bmatrix}\begin{bmatrix} 1 \\ 0 \\ 1 \end{bmatrix} = \frac{1}{2\sqrt{2}}e^{x_3-ct}\begin{bmatrix} \cos\omega t \\ \sin\omega t \\ \cos\omega t \end{bmatrix}.$$

Then

$$\boldsymbol{m}\cdot(\boldsymbol{dm}) = \frac{1}{4}e^{x_3-ct}\left[(\cos\omega t)(1) + (\sin\omega t)(0) + (\cos\omega t)(1)\right] = \frac{1}{2}e^{x_3-ct}\cos\omega t.$$

Substituting this into Eqn. (f) gives

$$\dot{\alpha}/\alpha = \frac{1}{2}e^{x_3-ct}\cos\omega t.$$

At $\boldsymbol{x} = 0$,

$$\dot{\alpha}/\alpha = \frac{1}{2}e^{-ct}\cos\omega t.$$

4. Recall Eqn. (c) derived above and repeated here for convenience:

$$x_3 = ct + h(\boldsymbol{X}) + d.$$

Using the initial conditions $\boldsymbol{x} = \boldsymbol{X}$ at $t = 0$, we have that $h(\boldsymbol{X}) = X_3$ and $d = 0$. Therefore

$$x_3 = X_3 + ct.$$

Substituting this relation into Eqn. (a) gives

$$v_1 = e^{X_3}\cos\omega t, \quad v_2 = e^{X_3}\sin\omega t, \quad v_3 = c.$$

Integrate the velocity components to obtain the time-dependent positions:

$$x_1 = \int v_1\,dt = e^{X_3}\frac{\sin\omega t}{\omega} + f(\boldsymbol{X}) + a,$$

where $f(\boldsymbol{X})$ is an arbitrary function of $\boldsymbol{X}$ and a is a constant. From the initial conditions at $t = 0$, we have $x_1 = X_1$ and so $f(\boldsymbol{X}) + a = X_1$ which implies that $f(\boldsymbol{X}) = X_1$ and $a = 0$. Therefore

$$x_1 = X_1 + e^{X_3}\frac{\sin\omega t}{\omega}.$$

Similarly,

$$x_2 = \int v_2\,dt = -e^{X_3}\frac{\cos\omega t}{\omega} + g(\boldsymbol{X}) + b,$$

where $g(\boldsymbol{X})$ is an arbitrary function of $\boldsymbol{X}$ and b is a constant. From the initial conditions at $t = 0$, we have $x_2 = X_2$ and so $-e^{X_3} + g(\boldsymbol{X}) + b = X_2$ which implies that $g(\boldsymbol{X}) = X_2 + e^{X_3}$ and $b = 0$. Therefore

$$x_2 = X_2 + e^{X_3}\left(1 - \frac{\cos\omega t}{\omega}\right).$$

To summarize:

$$x_1 = \varphi_1(\boldsymbol{X}, t) = X_1 + e^{X_3}\frac{\sin\omega t}{\omega},$$
$$x_2 = \varphi_2(\boldsymbol{X}, t) = X_2 + e^{X_3}\left(1 - \frac{\cos\omega t}{\omega}\right),$$
$$x_3 = \varphi_3(\boldsymbol{X}, t) = X_3 + ct.$$

3.19 [SECTION 3.6] A spherical cavity of radius A at time $t = 0$ in an infinite body is centered at the origin. An explosion inside the cavity at $t = 0$ produces the motion

$$\boldsymbol{x} = \frac{f(R,t)}{R}\boldsymbol{X}, \tag{*}$$

where $R = \|\boldsymbol{X}\| = \sqrt{X_I X_I}$ is the magnitude of the position vector in the reference configuration. The cavity wall has a radial motion given in Eqn. (*) such that at time t the cavity is spherical with radius $a(t)$.

1. Find the deformation gradient, $\boldsymbol{F}$, and the Jacobian of the transformation, J.
2. Find the velocity and acceleration fields.
3. Show that if the motion is restricted to be isochoric, then $f(R,t) = (R^3 + a^3 - A^3)^{1/3}$.

SOLUTION:

1. Start with Eqn. (*):

$$\boldsymbol{x} = \frac{f(R,t)}{R}\boldsymbol{X}, \tag{a}$$

where $R = \|\boldsymbol{X}\|$. The deformation gradient is given by

$$F_{iJ} = \frac{\partial x_i}{\partial X_J} = \frac{\partial}{\partial X_J}\left[\frac{f(R,t)}{R}\delta_{iI}X_I\right]$$
$$= \delta_{iI}\left[\frac{f'R - f}{R^2}\left(\frac{\partial R}{\partial X_J}\right)X_I + \frac{f}{R}\delta_{IJ}\right], \tag{b}$$

where $f'(R,t) = \partial f(R,t)/\partial R$. Now use

$$\frac{\partial R}{\partial X_J} = \frac{\partial\sqrt{X_K X_K}}{\partial X_J} = \frac{\delta_{JK}X_K + X_K\delta_{JK}}{2\sqrt{X_K X_K}} = \frac{2X_J}{2R} = \frac{X_J}{R},$$

so that Eqn. (b) becomes

$$F_{iJ} = \delta_{iI}\left[\frac{f'R - f}{R^2}\left(\frac{X_I X_J}{R}\right) + \frac{f}{R}\delta_{IJ}\right] = \frac{\delta_{iI}}{R}\left[\frac{f'R - f}{R^2}X_I X_J + f\delta_{IJ}\right].$$

Denote $g(R,t) \equiv (f'R - f)/R^2$, then

$$[\boldsymbol{F}] = \frac{1}{R}\begin{bmatrix} gX_1^2 + f & gX_1X_2 & gX_1X_3 \\ gX_1X_2 & gX_2^2 + f & gX_2X_3 \\ gX_1X_3 & gX_2X_3 & gX_3^2 + f \end{bmatrix}.$$

The Jacobian follows as

$$J = \det \boldsymbol{F} = \frac{f^2}{R^3}\left[f + g(X_1^2 + X_2^2 + X_3^2)\right] = \frac{f^2}{R^3}(f + gR^2).$$

Substituting in the definition of g,

$$J = \frac{f'f^2}{R^2}. \tag{c}$$

2. The velocity field is obtained by differentiating Eqn. (a):

$$\boldsymbol{v} = \left.\frac{\partial \boldsymbol{x}}{\partial t}\right|_{\boldsymbol{X}} = \frac{\partial f(R,t)}{\partial t}\left(\frac{X}{R}\right) = \frac{\dot{f}X}{R}.$$

The acceleration field follows from the velocity field as

$$\boldsymbol{a} = \left.\frac{\partial \boldsymbol{v}}{\partial t}\right|_{\boldsymbol{X}} = \frac{\partial^2 f(R,t)}{\partial t^2}\left(\frac{X}{R}\right) = \frac{\ddot{f}X}{R}.$$

3. An isochoric motion satisfies $J = 1$. Therefore from Eqn. (c), we have

$$\frac{f'f^2}{R^2} = \left(\frac{\partial f}{\partial R}\right)\left(\frac{f^2}{R^2}\right) = 1.$$

Rearranging this to

$$f^2\,df = R^2\,dR,$$

and integrate both sides to obtain

$$\frac{1}{3}f^3 = \frac{1}{3}R^3 + c(t),$$

where $c(t)$ is an arbitrary function of time. Then

$$f(R,t) = \left[R^3 + 3c(t)\right]^{1/3}. \tag{d}$$

To find $c(t)$ use the given boundary condition that the cavity wall at time t is spherical with radius $a(t)$. The distance from the origin to any point in the current configuration is the magnitude of $\boldsymbol{x}$, which follows from Eqn. (a) as

$$\|\boldsymbol{x}\| = \frac{f(R,t)}{R}\,\|\boldsymbol{X}\| = \frac{f(R,t)}{R}R = f(R,t).$$

The wall of the cavity in the reference configuration is defined by $\boldsymbol{X} = A\boldsymbol{e}_R$, where A is the radius of the cavity at time $t = 0$ and $\boldsymbol{e}_R$ is a radial unit vector. Then

$$\|\boldsymbol{x}\|\,(A\boldsymbol{e}_R, t) = f(A,t) = a(t).$$

Applying this boundary condition to Eqn. (d), we have

$$\left[A^3 + 3c(t)\right]^{1/3} = a(t),$$

from which $c(t) = ((a(t))^3 - A^3)/3$. Substituting this into Eqn. (d), we find

$$f(R,t) = \left[R^3 + a^3 - A^3\right]^{1/3},$$

which is the required result.
